Project Title:Contact Manager

Contact Manager

Team leader-M.Devi
Email-devimanokaran991@gmail.com

Team members:

1. M.Kanagavalli- kkanaga472@gmail.com
2.S. Jeevitha - jeevitha97891@gmail.com
3. M.Devi - devimanokaran991@gmail.com
4. S.Monisha - monishaselvam39@gmail.com
5.S.Dharshini -adharshini740@gmail.com

PROJECT OVERVIEW

Key Objectives:

- Provide secure user authentication and data isolation
- Enable efficient contact management through CRUD operations
- Implement flexible categorization using tags
- Offer fast search and filtering capabilities
- Deliver a responsive, cross-device user experience
-

Target Users:

- Freelancers and consultants managing client relationships

- Small business owners tracking vendor and customer contacts
- Students and young professionals building their network
- Event organizers managing attendee and volunteer information
- Anyone seeking a simple, privacy-focused contact management solution

PROJECT INSTRUCTION

1 Install Node.js (If Not Installed)

Download and install Node.js from: https://nodejs.org/

After installation, verify:

node -v
npm -v

2 Create a Backend Project Folder

• Choose or create a directory where you want your backend.

• Open your terminal or command prompt.

• Navigate to the selected directory: **cd your-project-folder**

• Create a new backend folder:

mkdir server cd
server

3 Initialize Node Project

Run: **npm init -y**

This will create a package.json file.

4 Install Required Dependencies

Install Express:

npm install express npm install mongoose

For development (auto-restart server):

npm install nodemon --save-dev

5 Create Basic Server File

Inside the server folder:

• Create a file called: **server.js** Add

this code :

```
import express from "express";

const app = express();
const PORT = 5000;

// Middleware
app.use(express.json());

// Test Route
app.get("/", (req, res) => {
  res.send("Backend is running 🚀");
});

// Start Server
app.listen(PORT, () => {
  console.log(`Server running on http://localhost:${PORT}`);
});
```

6 **Enable ES Modules (Important)**

Open package.json and add: **"type": "module"**

Example:

```
{
  "name": "server",
  "version": "1.0.0",
  "type": "module",
  "scripts": {
    "dev": "nodemon server.js"
  }
}
```

7 Start the Backend Server

Run: **npm run dev**
OR if not using nodemon: **node server.js**

8 Open in Browser

Open: **http://localhost:5000** You should see: **Backend is running**

PRE-REQUISITES

Software Requirements

Software	Purpose
Node.js	JavaScript runtime for backend
MongoDB	NoSQL database for data storage
npm	Package manager
Git	Version control system
Code Editor	VS Code, WebStorm, or similar

Knowledge Requirements

- JavaScript ES6+ syntax and concepts

- Node.js and Express.js for RESTful API development
- MongoDB and Mongoose ODM
- JWT authentication and bcrypt password hashing
- Git version control workflow

PROJECT THUMBNAIL

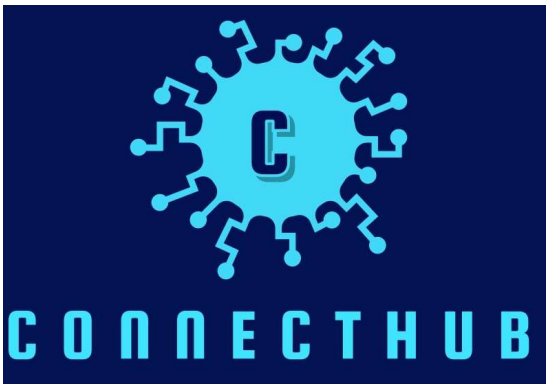

PROJECT ARCHITECTURE

High-level architecture diagram illustrating the three-tier backend structure.

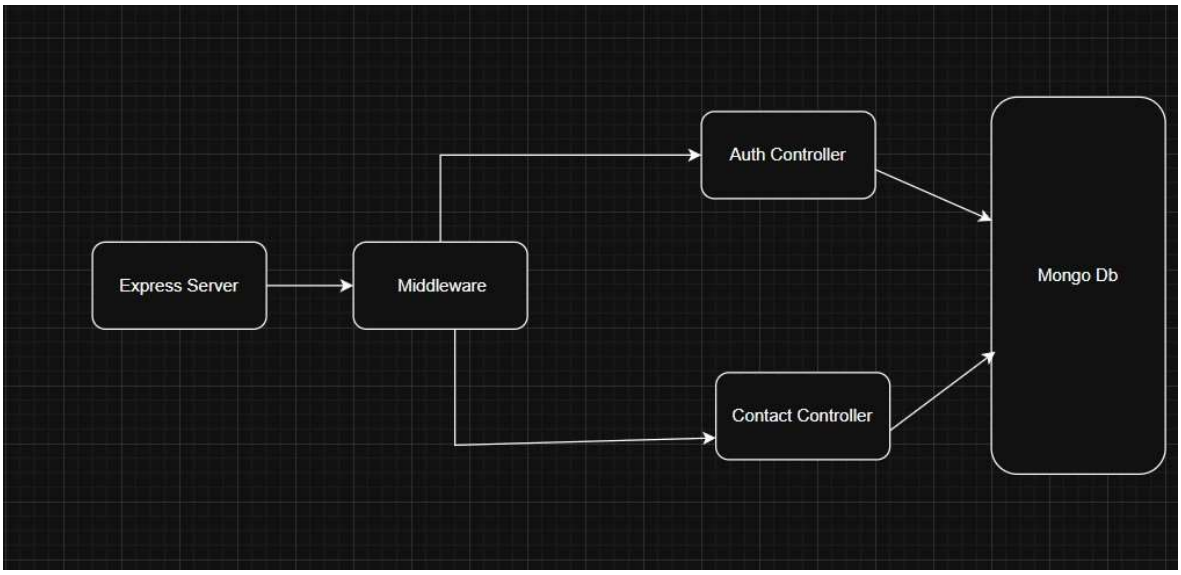

Node.js + Express Backend

• RESTful API architecture
• JWT authentication middleware
• MVC pattern (Models, Controllers, Routes)
• Input validation and error handling

MongoDB Database

• Document-based NoSQL storage
• Mongoose ODM for schema modeling
• Two collections: Users and Contacts
• Indexed fields for optimized queries

TECHNICAL ARCHITECTURE

Backend Architecture (Node.js + Express)

- **Controllers:** Business logic for authentication and CRUD operations
- **Models:** Mongoose schemas defining data structure
- **Routes:** API endpoint definitions with HTTP methods
- **Middleware:** JWT verification, error handling, validation
- **Configuration:** Database connection and environment variables

Database Architecture (MongoDB)

- **Users Collection:** _id, name, email, password (hashed), timestamps
- **Contacts Collection:** _id, userId (FK), name, email, phone, notes, tags[], timestamps
- **Relationships:** Many-to-One (Contacts → User)
- **Indexes:** email (unique), userId, name, tags (for search)

ER Diagram

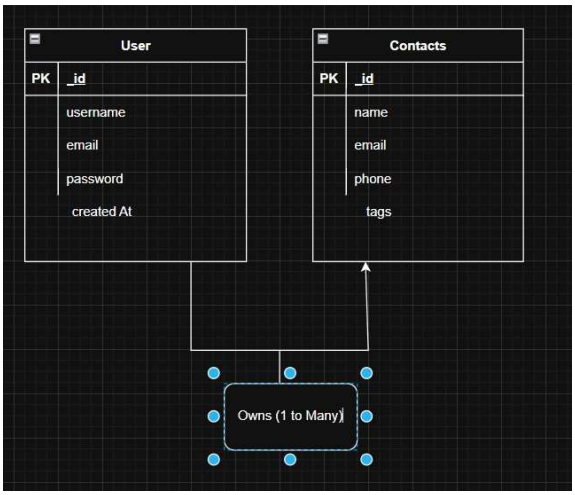

Features

Core Features

#	Feature	Description
1	User Authentication	JWT-based registration, login, and session management with bcrypt password hashing
2	Contact CRUD	Create, read, update, and delete contacts with full validation and error handling
3	Tag Categorization	Organize contacts with multiple tags (Work, Family, Friends, etc.) and filter by category
4	Real-time Search	Debounced search across name, email, and tags with instant results

Roles and Responsibility

- User -

    1. Registration - Register on the application using the name, email , password
    2. Login - Login on the application using the email and registered password
    3. Search - Search for a contact using name , email or tags
    4. Add Contact - Add new contact - name , email , phone , notes , tags
    5. Edit Contact - Edit the existing contact
    6. Delete Contact - Delete any contact

User Flow

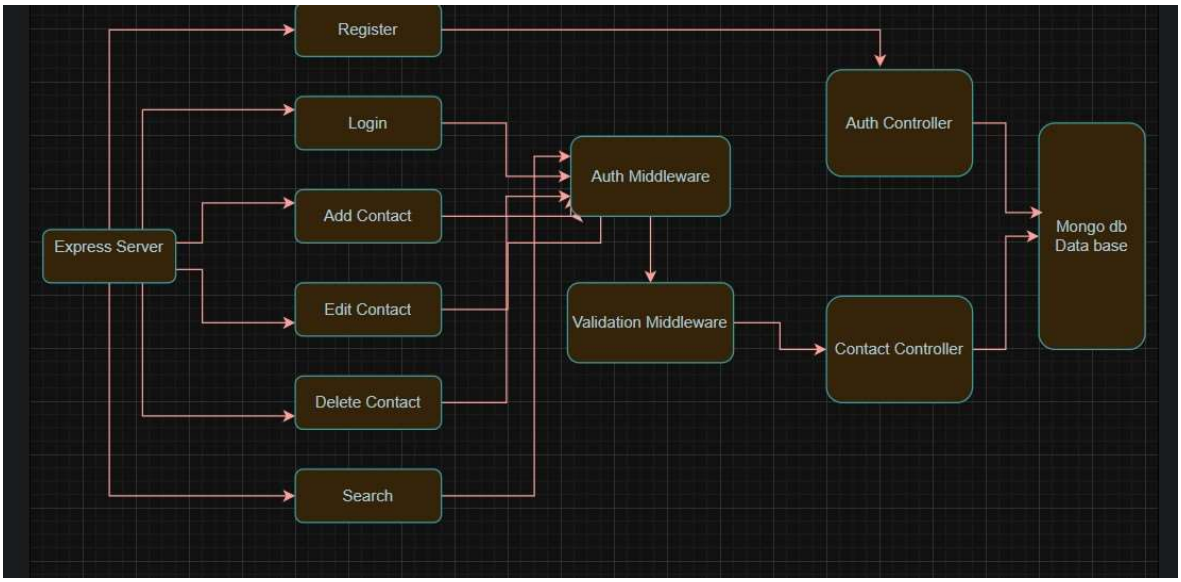

Project Setup and Configuration

Folder Structure

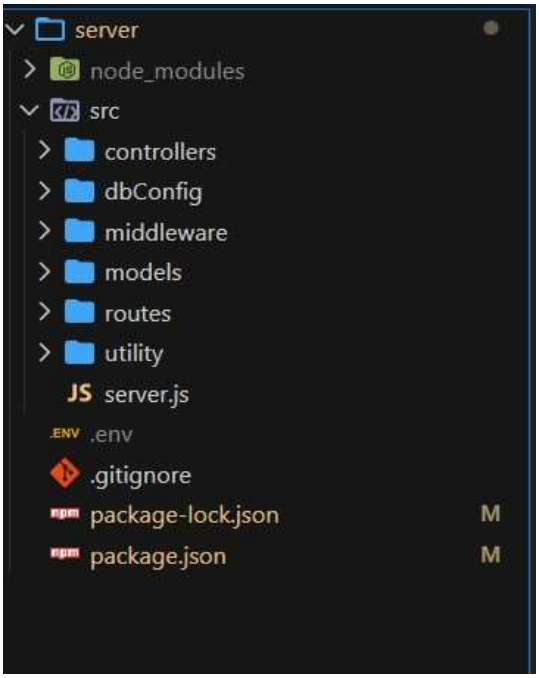

Project Setup

1. Install required tools and software:
   - Node.js.
   - MongoDB.

2. Create project folders and files:
   - Server folders.

3. Install Packages:

   Backend npm

   Packages

   Express.

   - Mongoose.
   - Cors.

Backend Development

- Setup express server
- Create index.js file in the server (backend folder).
- Create a .env file and define port number to access it globally. Configure the server by adding cors, body-parser.

```
// Middleware
app.use(cors());
app.use(express.json());
app.use(express.urlencoded({ extended: false }));
```

- User Authentication:
  - Create routes and middleware for user registration, login, and
  - Set up authentication middleware to protect routes that require user authentication.

```
import express from 'express';
const router = express.Router();
import { registerUser, loginUser, getMe } from '../controllers/authController.js';
import  authentication  from '../middleware/authMiddleware.js';
import { registerValidation, loginValidation } from '../utility/validators.js';
import validate from '../middleware/validation.js';

router.post('/register', registerValidation, validate, registerUser);
router.post('/login', loginValidation, validate, loginUser);
router.get('/me', authentication, getMe);

export default router;
```

- Define API Routes:
  - Create separate route files for different API functionalities such as user authentication and crud operation for contacts
  - Implement route handlers using Express.js to handle requests and interact with the database.

```
router.get('/search', authentication, searchContacts);
router.route('/')
  .get(authentication, getContacts)
  .post(authentication, contactValidation, validate, createContact);

router.route('/:id')
  .get(authentication, getContactById)
  .put(authentication, updateContactValidation, validate, updateContact)
  .delete(authentication, deleteContact);
```

- Implement Data Models:
  - Define Mongoose schemas for the different data entities like user and contact
  - Create corresponding Mongoose models to interact with the MongoDB database.
  - Implement CRUD operations (Create, Read, Update, Delete) for each model to perform database operations.

```
import mongoose from "mongoose";
import bcrypt from 'bcryptjs'
const userSchema = new mongoose.Schema(
  {
    name: {
      type: String,
      required: [true, 'Please add a name'],
      trim: true,
    },
    email: {
      type: String,
      required: [true, 'Please add an email'],
      unique: true,
      lowercase: true,
      trim: true,
      match: [
        /^\w+([\.-]?\w+)*@\w+([\.-]?\w+)*(\.\w{2,3})+$/,
        'Please add a valid email',
      ],
    },
    password: {
      type: String,
      required: [true, 'Please add a password'],
      minlength: 6,
      select: false,
    },
  },
  {
    timestamps: true,
  }
);

// Hash password before saving
```

```
const contactSchema = new mongoose.Schema(
  {
    userId: {
      type: mongoose.Schema.Types.ObjectId,
      required: true,
      ref: 'User',
    },
    name: {
      type: String,
      required: [true, 'Please add a contact name'],
      trim: true,
    },
    email: {
      type: String,
      trim: true,
      lowercase: true,
      match: [
        /^\w+([\.-]?\w+)*@\w+([\.-]?\w+)*(\.\w{2,3})+$/,
        'Please add a valid email',
      ],
    },
    phone: {
      type: String,
      trim: true,
    },
    tags: {
      type: [String],
      default: [],
    },
  },
  {
    timestamps: true,
  }
);
```

- Error Handling:
  - Implement error handling middleware to catch and handle any errors that occur during the API requests.
  - Return appropriate error responses with relevant error messages and HTTP status codes.

```
const errorHandler = (err, req, res, next) => {
  const statusCode = res.statusCode === 200 ? 500 : res.statusCode;

  res.status(statusCode).json({
    message: err.message,
    stack: process.env.NODE_ENV === 'production' ? null : err.stack,
  });
};

const notFound = (req, res, next) => {
  const error = new Error(`Not Found - ${req.originalUrl}`);
  res.status(404);
  next(error);
};

export { errorHandler, notFound };
```

Database Configuration and Setup

1. Configure MongoDB:
   - Install Mongoose.
   - Create database connection.
   - Create Schemas & Models.

2. Connect database to backend:

Now, make sure the database is connected before performing any of the actions through the backend. The connection code looks similar to the one provided below.

```
const PORT = process.env.PORT || 6001;
mongoose.connect(process.env.MONGO_URL, {
    useNewUrlParser: true,
    useUnifiedTopology: true
}).then(()=>{


    server.listen(PORT, ()=>{
        console.log(`Running @ ${PORT}`);
    });


}).catch((err)=>{
    console.log("Error: ", err);
})
```

3. Configure Schema:

Firstly, configure the Schemas for MongoDB database, to store the data in such pattern. Use the data from the ER diagrams to create the schemas.

The schemas are looks like for the Application.

```jsx
import mongoose from 'mongoose';

const UserSchema = new mongoose.Schema({
    username:{
        type: String,
        require: true
    },
    email:{
        type: String,
        require: true,
        unique: true
    },
    password:{
        type: String,
        require: true
    },
});

const User = mongoose.model("users", UserSchema);
export default User;
```

Project Execution

Execution Steps

1. Open the project folder in the terminal
2. Make sure you have a start script in the package.js file
3. Use the command **npm start** to start the server
4. You will the **Running on PORT** message on the successfully starting the server
5. You will also see the database connected message if the database is connected successfully
6. Use the Thunder client or Postman for using the created api's

Output Screenshots

1. Register Api

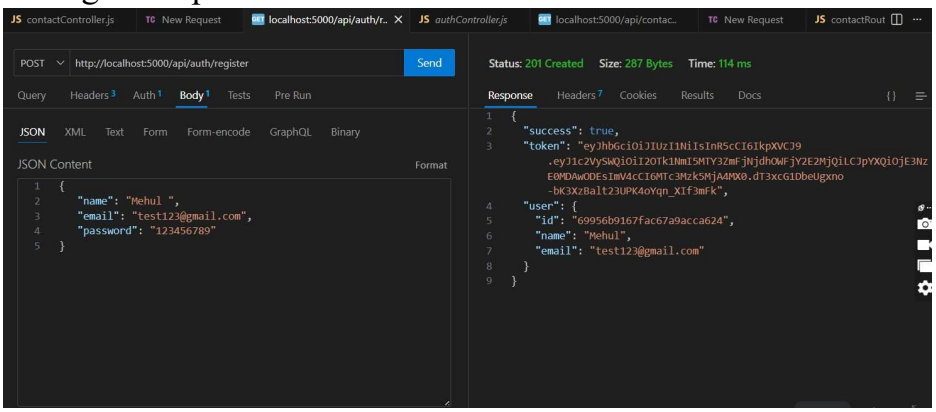

2. Login Api

POST http://localhost:5000/api/auth/login Send

Query Headers 3 Auth 1 Body 1 Tests Pre Run

JSON XML Text Form Form-encode GraphQL Binary

JSON Content Format

```
{

  "email": "test123@gmail.com",
  "password": "123456789"
}
```

Status: 200 OK Size: 287 Bytes Time: 75 ms

Response Headers 7 Cookies Results Docs { }


```
{
  "success": true,
  "token": "eyJhbGciOiJIUzI1NiIsInR5cCI6IkpXVCJ9
      .eyJ1c2VySWQiOiI2OTk1NmI5MTY3ZmFjNjdhOWFjY2E2MjQiLCJpYXQiOjE3
      E0MDIzNDgsImV4cCI6MTc3Mzk5NDM0OH0
      .GY5qumy4LXBMYO6GAKUauH5RH6IcDSHihqfwdpvOa3Q",
  "user": {
    "id": "69956b9167fac67a9acca624",
    "name": "Mehul",
    "email": "test123@gmail.com"
  }
}
```


Response Chart

3. Create New Contact

POST http://localhost:5000/api/contacts/ Send

Query Headers 3 Auth 1 Body 1 Tests Pre Run

JSON XML Text Form Form-encode GraphQL Binary

JSON Content Format

```
{
  "name": "Vishnu",
  "email": "test123@gmail.com"

}
```

Status: 201 Created Size: 237 Bytes Time: 18 ms

Response Headers 7 Cookies Results Docs { }

Copy


```
{
  "success": true,
  "contact": {
    "userId": "69956b9167fac67a9acca624",
    "name": "Vishnu",
    "email": "test123@gmail.com",
    "tags": [],
    "_id": "6995755067fac67a9acca628",
    "createdAt": "2026-02-18T08:16:16.651Z",
    "updatedAt": "2026-02-18T08:16:16.651Z",
    "__v": 0
  }
}
```


Response Chart

4. Update Contact

PUT http://localhost:5000/api/contacts/6995755067fac67a9acca628 Send

Query Headers 3 Auth 1 Body 1 Tests Pre Run

JSON XML Text Form Form-encode GraphQL Binary

JSON Content Format

```
{
  "phone": "7894561230",
  "tags": ["test"]

}
```

Status: 200 OK Size: 264 Bytes Time: 21 ms

Response Headers 7 Cookies Results Docs


```
{
  "success": true,
  "contact": {
    "_id": "6995755067fac67a9acca628",
    "userId": "69956b9167fac67a9acca624",
    "name": "Vishnu",
    "email": "test123@gmail.com",
    "tags": [
      "test"
    ],
    "createdAt": "2026-02-18T08:16:16.651Z",
    "updatedAt": "2026-02-18T08:18:49.762Z",
    "__v": 1,
    "phone": "7894561230"
  }
}
```

5. Delete Contact

DELETE http://localhost:5000/api/contacts/6995755067fac67a9acca628 Send

Query Headers 3 Auth 1 Body 1 Tests Pre Run

JSON XML Text Form Form-encode GraphQL Binary

JSON Content Format

```
{
    "phone": "7894561230",
    "tags": ["test"]

}
```

Status: 200 OK Size: 57 Bytes Time: 13 ms

Response Headers 7 Cookies Results Docs

```
{
  "success": true,
  "message": "Contact deleted successfully"
}
```

6. Search Contact

GET http://localhost:5000/api/contacts/search?q=test Send

Query Headers 2 Auth 1 Body Tests Pre Run

Query Parameters

☑	q	test
☐	parameter	value

Status: 200 OK Size: 249 Bytes Time: 7 ms

Response Headers 7 Cookies Results Docs

```
{
  "success": true,
  "count": 1,
  "contacts": [
    {
      "_id": "6995768767fac67a9acca637",
      "userId": "69956b9167fac67a9acca624",
      "name": "Vishnu",
      "phone": "7894561230",
      "tags": [
        "test"
      ],
      "createdAt": "2026-02-18T08:21:27.094Z",
      "updatedAt": "2026-02-18T08:21:27.094Z",
      "__v": 0
    }
  ]
}
```

7. Get The Current User

GET http://localhost:5000/api/auth/me Send

Query Headers 3 Auth 1 Body 1 Tests Pre Run

None Basic Bearer OAuth 2 NTLM AWS

Bearer Token

eyJhbGciOiJIUzI1NiIsInR5cCI6IkpXVCJ9.eyJ1c2VySWQiOiI2OTk1NmI5MTY3ZmFjNjdhOWFjY2E2MjQiLCJpYXQiOjE3NzE0MDIzNDgsImV4cCI6MTc3Mzk5NDM0OH0.GY5qumy4LXBMYO6GAKUauH5RH6IcDSHihqfwdpvOa3Q

Status: 200 OK Size: 100 Bytes Time: 7 ms

Response Headers 7 Cookies Results Docs

```
{
  "success": true,
  "user": {
    "id": "69956b9167fac67a9acca624",
    "name": "Mehul",
    "email": "test123@gmail.com"
  }
}
```

Project Demo

Contact Manager.webm

Code Link

Contact-Manager